LD Sensors Ltd
Tel +44 (0)1202 830264
Email sales@ldsensors.co.uk
Web www.ldsensors.co.uk

Displacement Sensor Accessory

Double End Clamp Types DMC 17-25
DMC 19-25
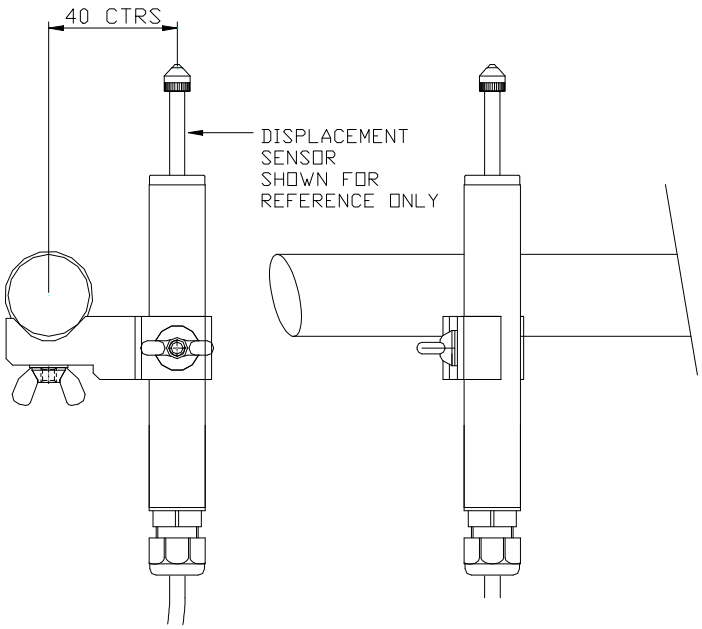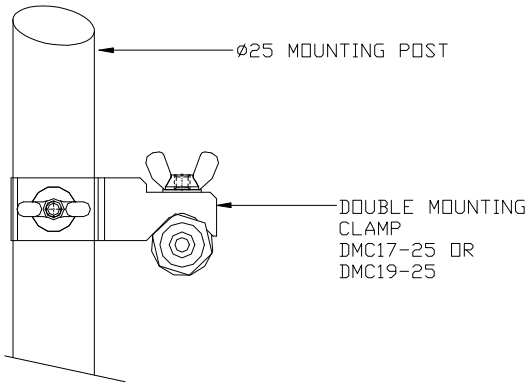
Materials Clamp Bar Anodised Aluminium
Ring & Fixings Stainless Steel